TransinK SERIES - TransinK-200M

(SILICON-AVALANCHE HIGH SURGE DIODES)

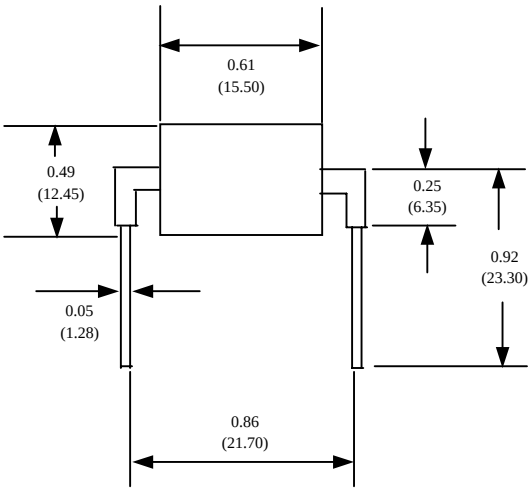

Dimensions in inches and (millimeters)

FEATURES

◎ Glass passivated chip junction
◎ 1000A surge capability at 8 x 20μsec waveform (per IEC-61000-4-5)
◎ Excellent clamping capability
◎ Repetition rate（duty cycle）：0.05％
◎ Low incremental surge resistance
◎ Fast response time：typically less than 1.0μs from 0 Volts to BV
◎ Operation temperature：-40℃~125℃
◎ Expoxy encapsulated has Underwriters Laboratory Flammability Classification 94V-0

MECHANICAL DATA

Terminal：Ag Plated Axial leads,solderable per MIL-STD-750,Method 2026
Mounting Position：Any
Weight：0.328±0.033 ounces （9.300±0.930g）

RATING	SYMBOL	VALUE	UNITS
Breakdown voltage @ IT=1.0 mA	VBr	200±5%	Volt
Clampling Voltage @400A /10x1000 μ sec waveform	VC	266 max	Volt
Reverse Leakage @ 181.8V	IR	20 μ (max)	A

TransinK SERIES - TransinK - 200M

(SILICON-AVALANCHE HIGH SURGE DIODES)

Fig. 1 - Peak Pulse Power Rating Curve

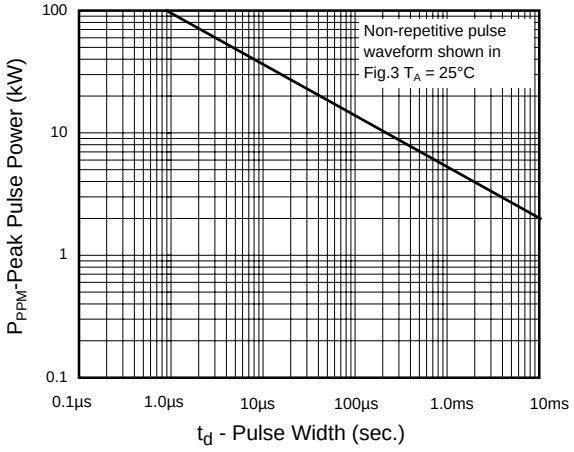

Fig.2 - Pulse Derating Curve

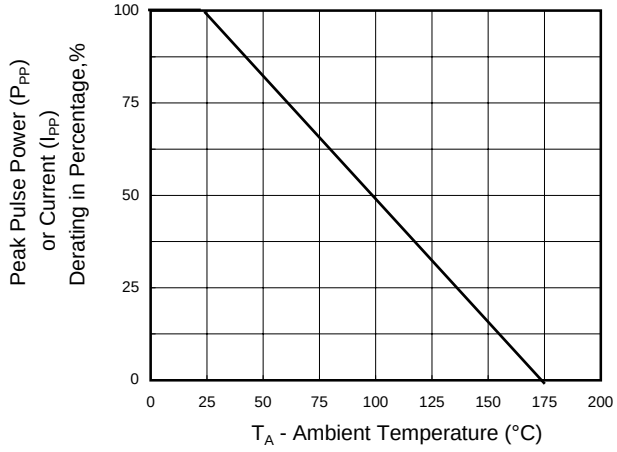

Fig.3 - Pulse Waveform